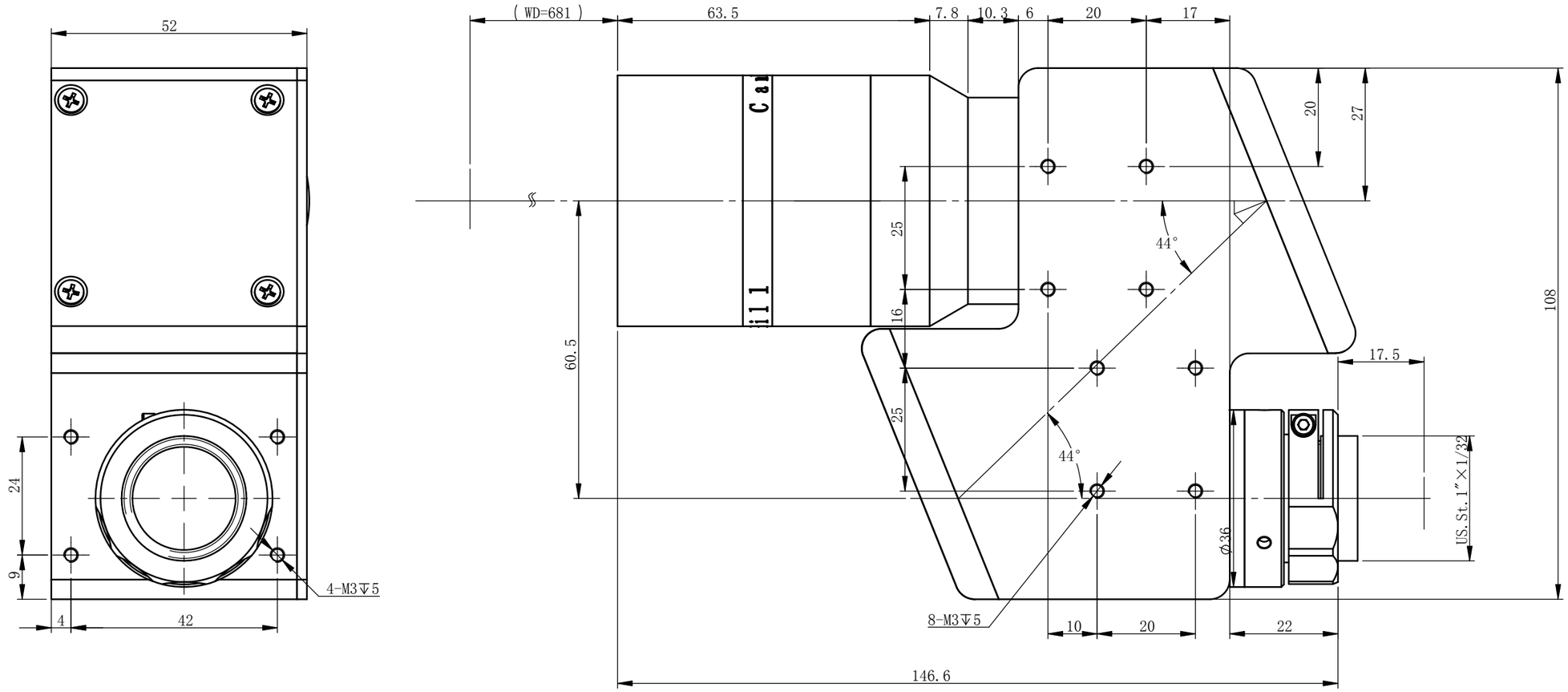

XF-MH04X681

Specification

Magnification	0.4
Object field of view	Φ27.5mm
Image field of view	Φ11mm
Working Distance	681mm±3%
Depth of field	5.0mm
F#	F7.5
Resolution	12.4μm
MTF	>0.3@130lp/mm
Distortion	<0.0002%
Detector type：	
2/3' 8.45×7.07	21.1×17.7mm
1/1.8' 7.2×5.3	18.0×13.3mm
1/2' 6.4×4.8	16.0×12.0mm
1/3' 4.8×3.6	12.0×9.0mm

Undefined tolerance(mm)		degree	File Name		
X.X	±0.2	±30min	XF-MH04X681-外形尺寸-EN		
X.XX	±0.02		Drawing Name		
X.XXX	±0.005	Drawing Size: A3			
	Sign	Data/Ver.	Material	Ratio	Product Name
Design				1:1	
Modify1			Qty		Canrill OPTICS
Modify2			Total:	Page:	

All design and drawings are intellectual property of Canrill Optics, can not be copied without Canrill's authorization.